E.L. Mustee & Sons, Inc.
5431 West 164th St.
Brook Park, OH 44142
Phone: 216.267.3100
Email: info@mustee.com
Web: www.mustee.com

DURAWALL® (Walls), DURABASE® (Floors), STYLEMATE® (Enclosure)

Rectangular Shower Ensembles 36" x 60"

Mustee's 36" x 60" rectangular shower ensemble is a combination of a DURABASE® shower floor, DURAWALL® shower walls and a STYLEMATE® by-pass enclosure. The shower ensemble is perfect for anyone looking to create a dramatic, shower space.

Features

- High quality, molded-fiberglass.
- Wall panels feature a sturdy, watertight tongue-and-groove and a large, molded-in shelf.
- Mounts direct-to-stud with mounting flanges.
- By-Pass Enclosure with tempered safety glass.
- Fiberglass shower floors are strong, and feature a slip-resistant floor design.
- All surfaces are easy to clean, with a semi-gloss finish.

Code Accepted

Meet or exceed performance requirements:

- IAPMO® as indicated
- American National Standards Institute (ANSI) Specification Z 124-2022 and Z 97.1
- American Society of Testing & Materials (ASTM) E-84

Specifications

General: As manufactured by E.L. Mustee & Sons, Inc.

DURAWALL® Shower Wall

Model	Color
761-36WHT	White

Model 761-36WHT wall shall be semi-gloss, 4-piece wall. Panels are molded fiberglass, using matched metal molds with uniform thickness and mount direct-to-studwalls. Includes two center panels with molded-in shelf and two side panels. Panels use a tongue-and-groove connection. Shall meet ANSI Specification Z 124-2022 Color: White.

DURABASE® Shower Floor
DURABASE®-LP Shower Floor

Model	Color
3660M	White
3660LP	White

Model _____ floor to be one-piece, molded fiberglass, made with matched metal molds. Surface to be slip-resistant design. Size 36" x 60". Tiling flange will extend not less than 1" higher than the threshold which provides an integral molded water barrier. Shall meet ANSI Specification Z 124-2022. IAPMO® listed. Color: White.

STYLEMATE® By-Pass Enclosure

Model	Color/Glass
Framed design	
60.403	Bright Silver/Clear
Frameless design	
60.406	Bright Silver/Clear
60.407	Brushed Nickel/Clear
60.408	Black Bronze/Clear

Model _____ fits 59" opening. Shall be a By-Pass style door with a _____ (Bright Silver, Brushed Nickel, Black Bronze) finish aluminum frame and clear tempered safety glass. Shall meet ANSI Specification Z 97.1.

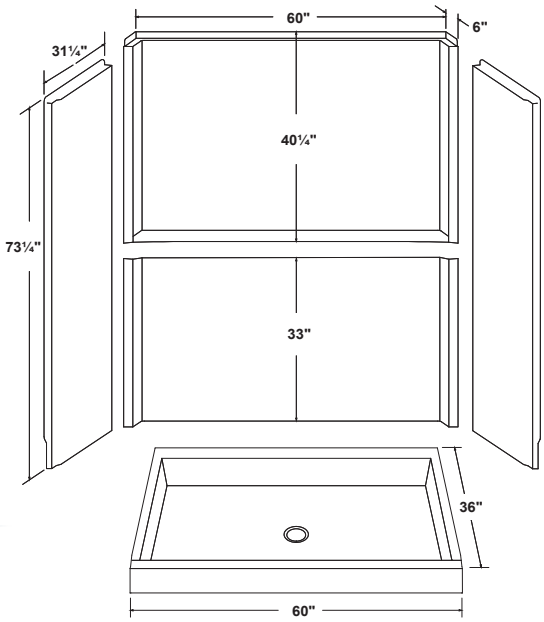

MADE IN U.S.A.

To reorder, specify ADV-532 (02-26)

Notice: Our continuous commitment to product improvement may result in changes to product specifications without notice.
Patented and patents pending. Made and Printed in U.S.A.